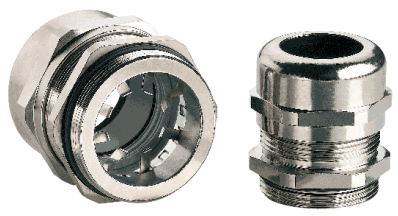

EMC Brass Cable Glands - (2nd Generation) - Pg Thread

EMC cable glands are used in applications which require use of shielded cables for electromagnetic protection. These glands help in maintaining the electromagnetic integrity of the shielded cable by means of contacts placed inside the body of the gland, which come in contact with the shield of the insulation stripped cable which is passed through the gland. The 2nd generation EMC cable glands have contact leaves fixed to the gland body in such a manner than when the cable is made to enter the glad they allow for an easy entry by opening up with the push force of the cable. Once the cable is in position the spring action of the contact leaves ensures that a proper contact is made with the braiding ensuring that integrity of the electromagnetic shielding is maintained.

Technical Data

Material	Brass, Nickel Plated
Temperature Range	-20° C to +100°C Continuous, -40°C to +150°C Intermittent
Protection Class	IP 68-5 Bar, 30 min
O Ring	Perbunan (NBR)
Sealing Ring	CR-Chloroprene Rubber
Attachment Thread	DIN 40430
Clamping Insert	Polyamide 6 UL94 V2
Contact Spring	Special Copper Alloy

Accessories

Image	Cat. no.	Description
	Brass / SS Standard Locknuts - Pg Threads	In certain applications, installing cable glands directly on enclosure or...
	EMC Brass / SS Lock Nuts - Pg Threads	These lock nuts are specifically designed for use with EMC...
	Flat Washers - Pg Thread	Flat washer shields the surface by uniformly distributing load when...
	O Rings - For PG Thread Cable Glands	O-rings are round sealing elements made up of NBR material...

Approvals

VDE c UL us DNV·GL

Product Drawing

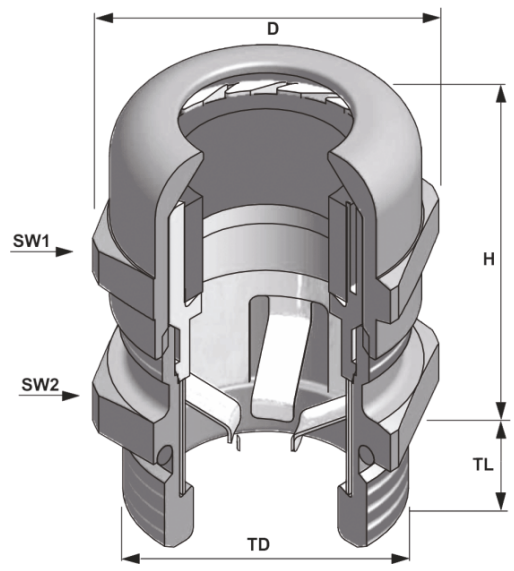

Ordering Information

Pg Thread - 2nd Generation

Cat. No.	Size	Thread Diameter D (mm)	Thread Length L (mm)	Spanner Size (mm)	Clamping Range (mm)	Shield Diameter (mm)	Standard Pack (Pieces)
BSEM-01	Pg 7	12.5	6	14	3 - 6.5	2.5 - 4.5	50
BSEM-02	Pg 9	15.2	6	17	4 - 8	3.5 - 6.0	50

Pg Thread - 2nd Generation

Cat. No.	Size	Thread Diameter D (mm)	Thread Length L (mm)	Spanner Size (mm)	Clamping Range (mm)	Shield Diameter (mm)	Standard Pack (Pieces)
BSEM-03	Pg 11	18.6	6	20	5 - 10	4.0 - 8.0	50
BSEM-04	Pg 13.5	20.4	6.5	22	6 - 12	5.0 - 10.0	50
BSEM-05	Pg 16	22.5	6.5	24	10 - 14	8.5 - 11.5	25
BSEM-06	Pg 21	28.3	7.2	30	13 - 18	11.0 - 14.0	25
BSEM-07	Pg 29	37	8	40	18 - 25	16.0 - 20.0	20
BSEM-08	Pg 36	47	9	50	22 - 32	20.0 - 27.0	15
BSEM-09	Pg 42	54	12	58	30 - 38	28.0 - 34.0	12
BSEM-10	Pg 48	59.3	14	64	34 - 44	31.0 - 40.0	12
BSEN-01	Pg 7	12.5	10	14	3 - 6.5	2.5 - 4.5	50
BSEN-02	Pg 9	15.2	10	17	4 - 8	3.5 - 6.0	50
BSEN-03	Pg 11	18.6	10	20	5 - 10	4.0 - 8.0	50
BSEN-04	Pg 13.5	20.4	10	22	6 - 12	5.0 - 10.0	50
BSEN-05	Pg 16	22.5	10	24	10 - 14	8.5 - 11.5	25
BSEN-06	Pg 21	28.3	12	30	13 - 18	11.0 - 14.0	25
BSEN-07	Pg 29	37	12	40	18 - 25	16.0 - 20.0	20
BSEN-08	Pg 36	47	14	50	22 - 32	20.0 - 27.0	15
BSEN-09	Pg 42	54	16	58	30 - 38	28.0 - 34.0	12
BSEN-10	Pg 48	59.3	18	64	34 - 44	31.0 - 40.0	12